1

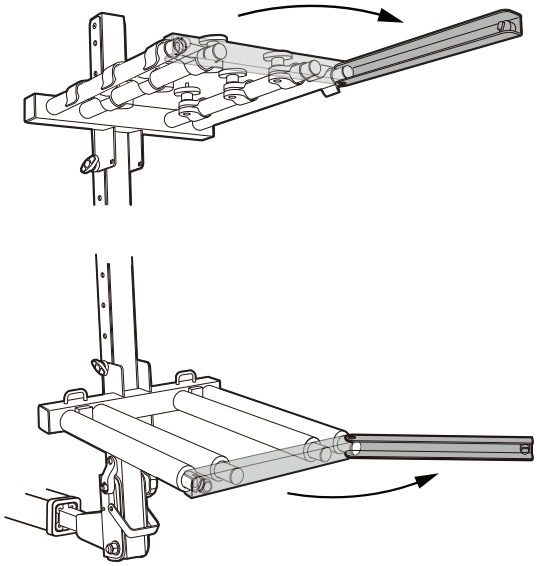

2

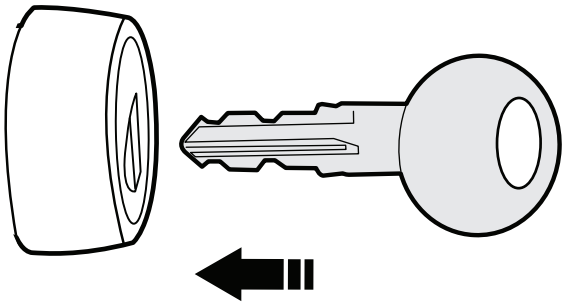

3

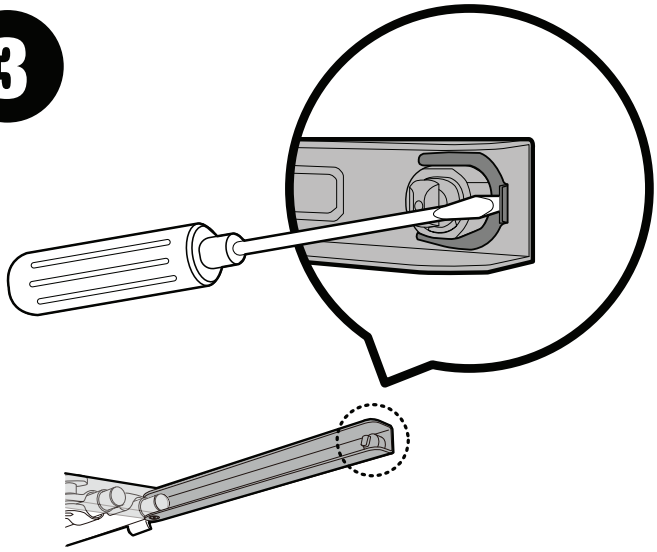

4

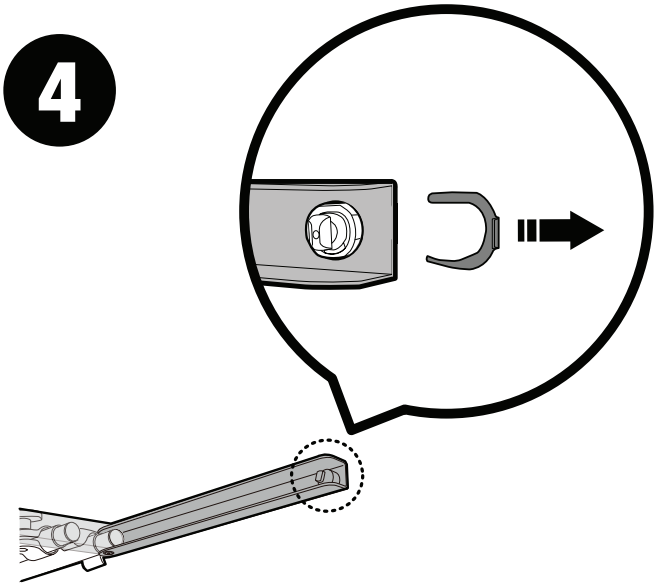

5

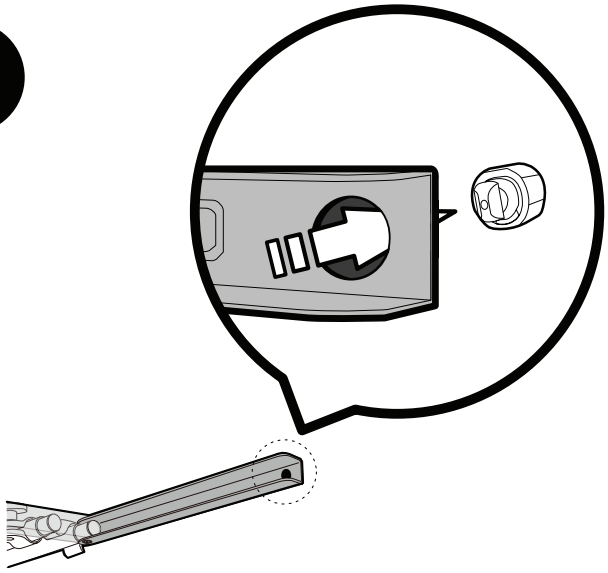

6

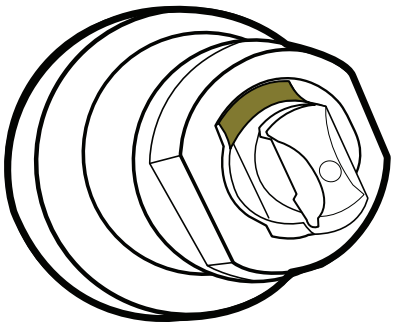

7

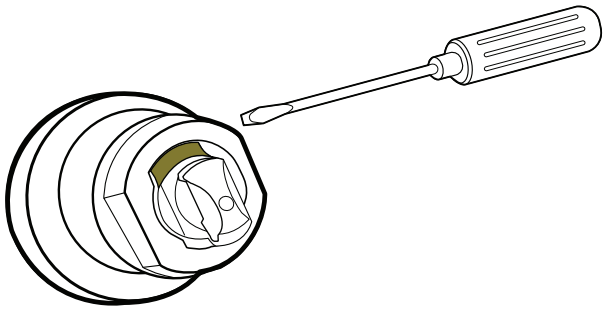

8

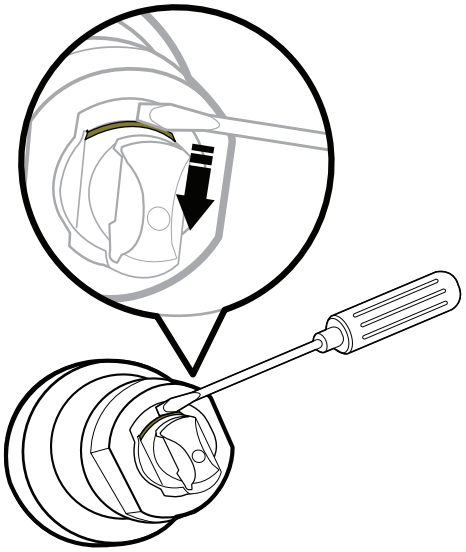

9

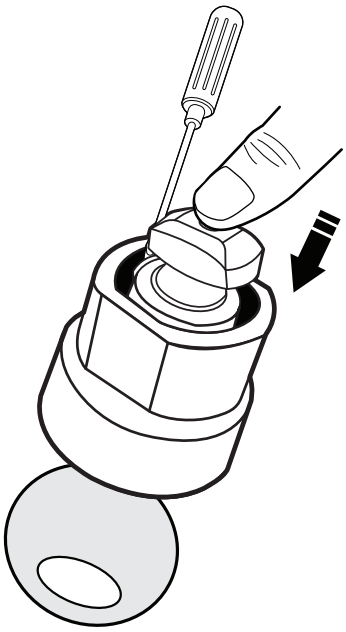

10

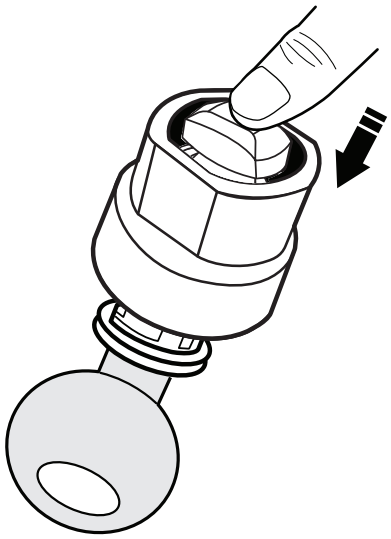

11

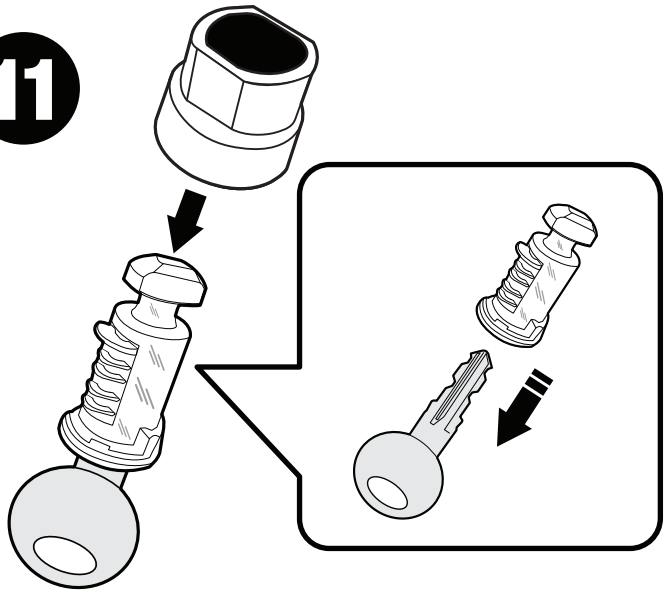

12

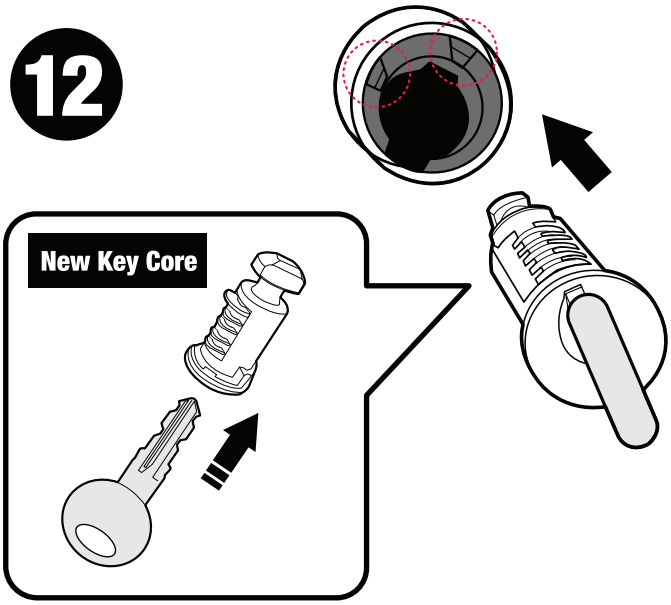

13

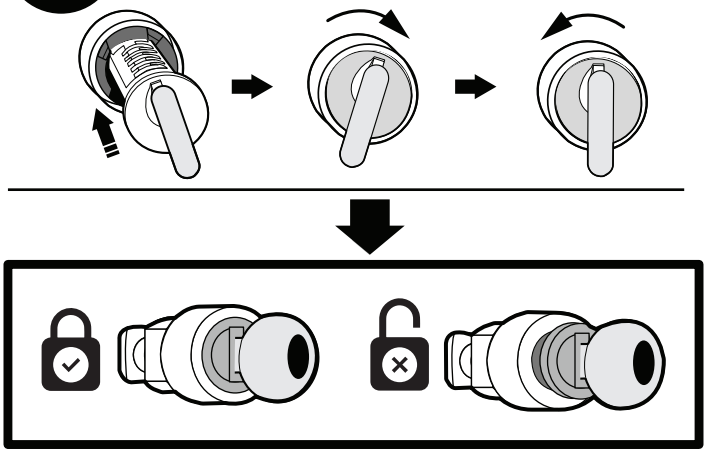

MAKE SURE THE KEY CORE IS LOCKED INTO THE SLEEVE

14

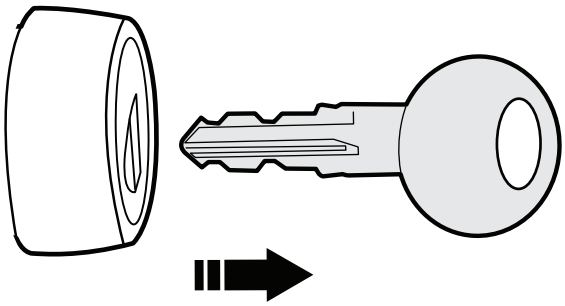

15

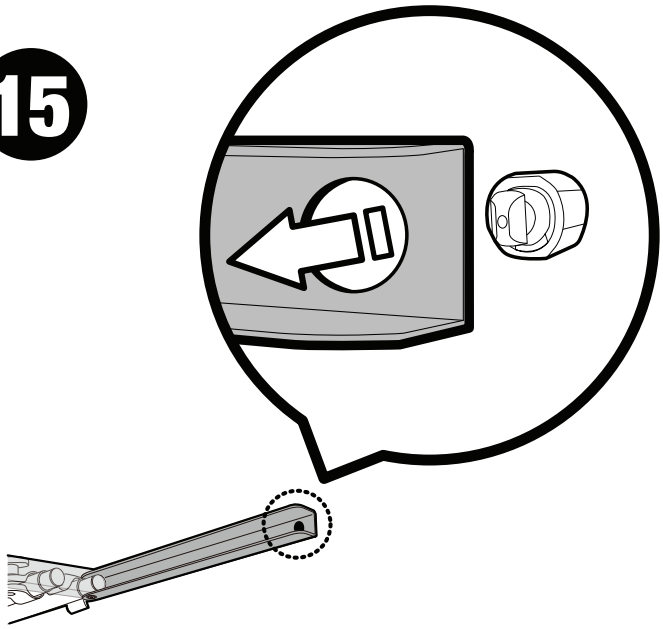

16

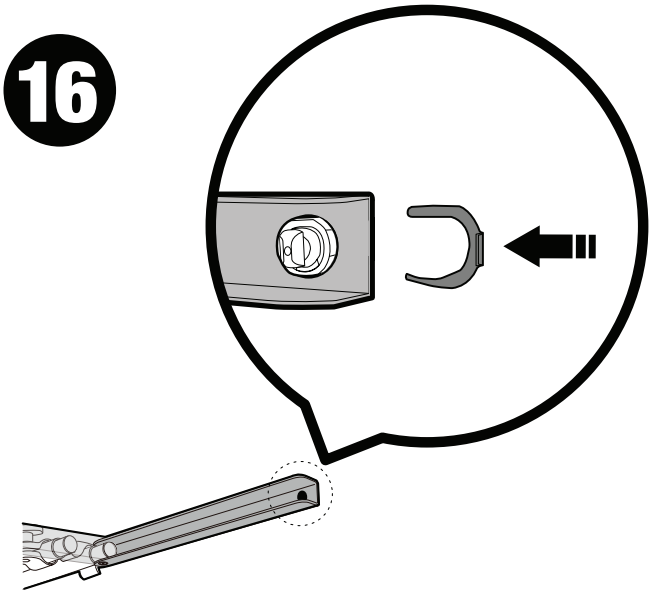

17

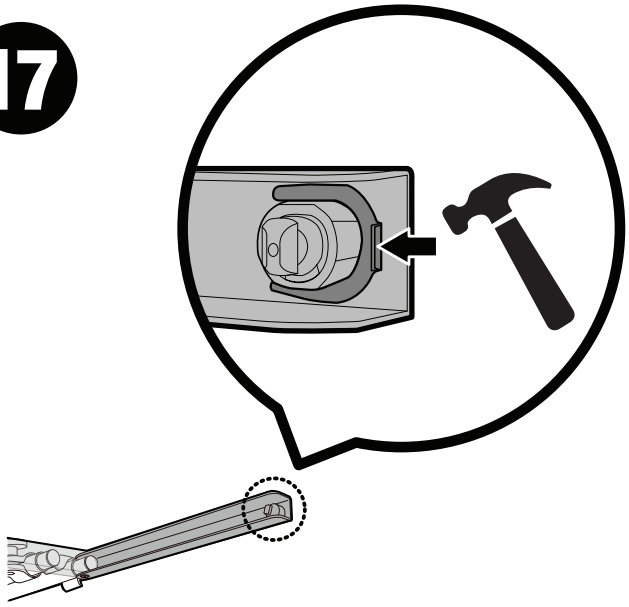
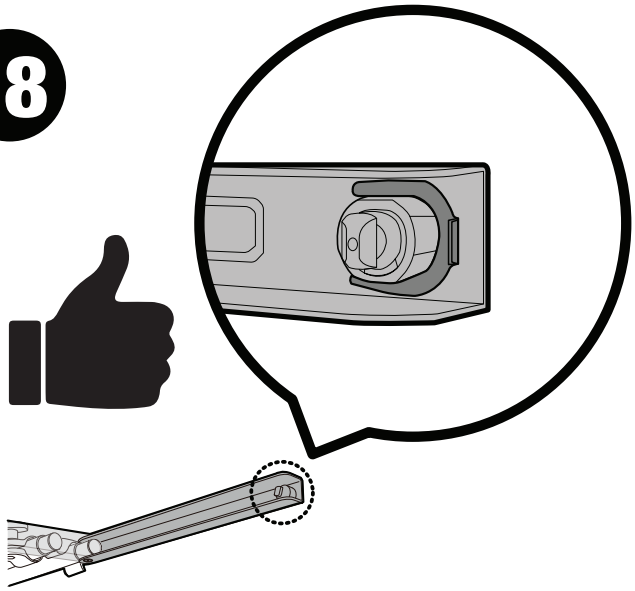
18